geocool HEAT PUMP

Reliable energy-saving comfort.

Saving the environment for future generations

WATER SOURCE & GEOTHERMAL HEAT PUMPS

SPECIFICATION DATA SHEET

R410A.REFRIGERANT - WATER SOURCE & GEOTHERMAL HEAT PUMPS

GCHP01024

WATER LOOP				GROUND WATER			
Cooling		Heating		Cooling		Heating	
Capacity	EER	Capacity	COP	Capacity	EER	Capacity	COP
25,500	17	27,500	5.0	27,500	27.4	20,500	4.2

GROUND LOOP				FLOW RATE	
Cooling		Heating		AIR	WATER
Capacity	EER	Capacity	COP	CFM	GPM
25,500	19.7	16,500	3.6	800	6

ELECTRICAL SPECIFICATIONS

Electrical Characteristics	Elect. Symbol	Compressor		Min Circuit Ampacity	Max Fuse Size
		RLA	LRA		
230/1/60	A	12.8	60	19	30
230/3/60	C	7.8	55	13	20
460/3/60	D	3.9	22.4	6	15
265/1/60	B	10.9	58	16	25

FLUID PRESSURE DROP

Fluid Flow	Pressure drop	
(GPM)	(FOH)	(PSIG)
3.0	1.4	0.6
4.0	2.6	1.1
5.3	4.5	1.9
6.0	**5.8**	**2.5**
7.5	9.0	3.9

	UNIT WEIGHT (lbs)		DIMENSION		
	Unit Weight	Shipping Weight	Length	Width	Height
Vertical	210	230	21.50	21.50	39.00
Horizontal	210	230	33.50	21.50	20.75

COOLING

Entering Fluid Temp. (^{0}F)	Entering Air Fluid (^{0}F)	Total Capacity (MBtuH)	Sensible Capacity (MBtuH)	SHF	Power Input (kW)	Heat Rejection (MBtuH)	EER
50	70 db 61 wb	31.27	10.41	0.33	1.03	34.16	36.1
59		30.08	9.98	0.33	1.18	33.48	29.6
70		28.63	9.38	0.33	1.37	32.68	23.7
86		26.39	8.61	0.33	1.67	31.45	17.6
100		24.34	0.00	0.00	1.97	30.42	13.5
50	75 db 63 wb	27.74	19.77	0.71	1.04	30.65	31.8
59		26.82	19.56	0.73	1.19	30.23	26.3
70		25.41	18.79	0.74	1.36	29.43	21.2
86		23.45	17.93	0.76	1.65	28.44	15.8
100		21.70	17.05	0.79	1.95	27.71	12.2
50	80.6 db 66.2 wb	29.35	21.63	0.74	1.03	32.3	34.0
59		**27.50**	**20.62**	**0.75**	**1.17**	**30.86**	**27.4**
70		26.87	20.56	0.77	1.36	30.87	22.5
86		**25.50**	**20.11**	**0.79**	**1.67**	**30.55**	**17.0**
100		22.93	18.87	0.82	1.95	28.95	12.8
50	85 db 71 wb	31.76	21.15	0.67	1.07	34.78	35.0
59		30.56	20.58	0.67	1.16	33.89	30.7
70		29.06	19.99	0.69	1.35	33.02	24.6
86		26.79	19.19	0.72	1.64	31.75	18.2
100		24.78	18.35	0.74	1.94	30.75	14.0

As a result of continuing research and development, specifications are subject to change without notice.

Please contact factory for up-to-date values. *Website: www.ƎŜ2ŕ022f*

HEATING

Entering Fluid Temp. (^{0}F)	Entering Air Fluid (^{0}F)	Total Capacity (MBtuH)	Power Input (kW)	Heat of Absorb. (MBtuH)	COP
50	60	21.85	1.52	17.22	4.7
60		24.52	1.56	19.77	5.2
68		26.68	1.58	21.86	5.5
80		30.25	1.64	25.23	6.0
50	**68**	**20.50**	**1.60**	**15.62**	**4.2**
60		24.08	1.70	18.87	4.6
68		**27.50**	**1.78**	**22.00**	**5.0**
80		29.78	1.78	24.28	5.4
50	80	21.13	1.89	15.24	3.6
60		23.62	1.92	17.65	4.0
68		25.80	1.95	19.71	4.2
80		29.28	2.04	22.90	4.6

LOW TEMP HEATING

with Antifreeze by ARI-ISO 13256-1

Entering Fluid Temp. (^{0}F)	Entering Air Fluid (^{0}F)	Total Capacity (MBtuH)	Power Input (kW)	Heat of Absorb. (MBtuH)	COP
25	60	15.19	1.38	11.07	3.7
32		16.73	1.39	12.54	4.0
40		18.59	1.41	14.36	4.4
25	68	14.97	1.50	10.45	3.3
32		**16.50**	**1.51**	**11.92**	**3.6**
40		18.34	1.53	13.70	3.9
25	80	14.74	1.70	9.50	2.8
32		16.25	1.73	10.93	3.1
40		18.05	1.74	12.68	3.4

geocool™
Reliable energy-saving comfort.

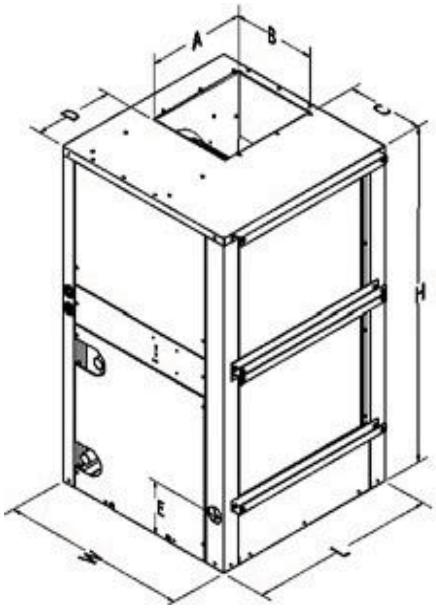

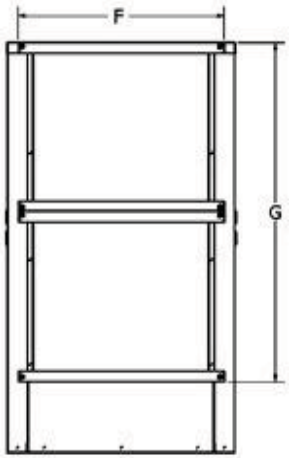

Water Source Heat Pump Units - Vertical

Unit Model #	Dimensions - Inches												Air Filters	
	L	W	H	A	B	C	D	E	F	G	Fluid Conn.	Drain Conn.	Nominal Filter Size	Qty
GCHP01024V	21.5	21.5	39	11.25	9.5	9.00	8.38	6.00	19.50	32.13	3/4	3/4	16x20x1	2
GCHP01031V	21.5	21.5	39	11.25	9.5	9.00	8.38	6.00	19.50	32.13	3/4	3/4	16x20x1	2
GCHP01036V	21.5	21.5	39	11.25	9.5	9.00	8.38	6.00	19.50	32.13	3/4	3/4	16x20x1	2
GCHP01041V	21.5	21.5	39	11.25	9.5	9.00	8.38	6.00	19.50	32.13	3/4	3/4	16x20x1	2
GCHP01048V	26	24	43	13.00	11.38	11.00	6.50	2.25	24.00	40.00	1	3/4	24x20x1	2
GCHP01060V	26	24	43	13.00	11.38	11.00	6.50	2.25	24.00	40.00	1	3/4	24x20x1	2

June 2011

Notes:
1. Units are subject to change without notice.
1. All dimensions +/- 0.25"

geocool™ Reliable energy-saving comfort.

HEAT PUMP

Saving the environment for future generations

WATER SOURCE & GEOTHERMAL HEAT PUMPS

SPECIFICATION DATA SHEET

R410A.REFRIGERANT - WATER SOURCE & GEOTHERMAL HEAT PUMPS

GCHP01031

WATER LOOP				GROUND WATER			
Cooling		Heating		Cooling		Heating	
Capacity	EER	Capacity	COP	Capacity	EER	Capacity	COP
31,000	16	36,000	4.8	39,000	26	27,000	4.1

GROUND LOOP				FLOW RATE	
Cooling		Heating		AIR	WATER
Capacity	EER	Capacity	COP	CFM	GPM
31,800	17.6	20,000	3.5	1,000	7.5

ELECTRICAL SPECIFICATIONS

Electrical Characteristics	Elect. Symbol	Compressor		Min Circuit Ampacity	Max Fuse Size
		RLA	LRA		
230/1/60	A	14.7	72.5	24	35
230/3/60	C	10.4	63	19	25
460/3/60	D	4.5	31	9	15
265/1/60	B	12.5	61	16	25

FLUID PRESSURE DROP

Fluid Flow	Pressure drop	
(GPM)	(FOH)	(PSIG)
3.8	2.1	0.9
5.0	3.8	1.7
6.6	6.6	2.9
7.5	**8.5**	**3.7**
9.4	13.3	5.8

	UNIT WEIGHT (lbs)		DIMENSION		
	Unit Weight	Shipping Weight	Length	Width	Height
Vertical	210	230	21.50	21.50	39.00
Horizontal	210	230	33.50	21.50	20.75

COOLING

Entering Fluid Temp. (^{0}F)	Entering Air Fluid (^{0}F)	Total Capacity (MBtuH)	Sensible Capacity (MBtuH)	SHF	Power Input (kW)	Heat Rejection (MBtuH)	EER
50	70 db 61 wb	36.08	23.88	0.66	1.65	40.72	26.5
59		34.33	23.07	0.67	1.79	39.45	22.9
70		32.13	22.05	0.69	1.97	37.86	19.1
86		28.82	20.58	0.71	2.21	35.38	15.0
100		25.81	19.21	0.74	2.42	33.10	12.1
50	75 db 63 wb	37.52	26.98	0.72	1.64	42.13	27.8
59		35.71	25.66	0.72	1.78	40.81	23.9
70		33.43	24.60	0.74	1.97	39.17	19.9
86		30.03	22.97	0.77	2.23	36.65	15.5
100		26.90	21.58	0.80	2.44	34.26	12.5
50	80.6 db 66.2 wb	39.86	28.84	0.72	1.62	44.41	29.9
59		**39.00**	**28.76**	**0.74**	**1.79**	**44.12**	**26.0**
70		35.52	26.88	0.76	1.96	41.25	21.12
86		**31.00**	**24.65**	**0.80**	**2.22**	**37.61**	**16.0**
100		28.63	23.93	0.84	2.33	35.59	14.0
50	85 db 71 wb	43.52	28.93	0.66	1.57	47.90	33.9
59		41.39	28.08	0.68	1.81	46.59	27.2
70		38.78	26.98	0.70	1.98	44.55	22.9
86		34.87	24.82	0.71	2.26	41.60	17.7
100		31.40	23.50	0.75	2.37	38.50	15.1

As a result of continuing research and development, specifications are subject to change without notice.

Please contact factory for up-to-date values. *Website: www.geo.cool*

HEATING

Entering Fluid Temp. (^{0}F)	Entering Air Fluid (^{0}F)	Total Capacity (MBtuH)	Power Input (kW)	Heat of Absorb. (MBtuH)	COP
50	60	28.69	2.15	22.32	4.5
60		33.00	2.26	26.26	4.9
68		36.52	2.33	29.56	5.2
80		41.69	2.38	34.56	5.8
50	**68**	**27.00**	**2.22**	**20.41**	**4.1**
60		31.73	2.37	24.62	4.5
68		**36.00**	**2.49**	**28.50**	**4.8**
80		40.45	2.54	32.76	5.3
50	80	25.87	2.38	18.72	3.6
60		29.90	2.53	22.25	3.9
68		33.38	2.64	25.36	4.2
80		38.55	2.77	30.08	4.6

LOW TEMP HEATING

with Antifreeze by ARI-ISO 13256-1

Entering Fluid Temp. (^{0}F)	Entering Air Fluid (^{0}F)	Total Capacity (MBtuH)	Power Input (kW)	Heat of Absorb. (MBtuH)	COP
25	60	18.28	1.80	13.13	3.6
32		20.93	1.90	15.44	3.8
40		24.15	2.00	18.29	4.1
25	68	17.40	1.85	12.06	3.3
32		**20.00**	**1.96**	**14.29**	**3.5**
40		23.14	2.08	17.01	3.8
25	80	16.04	1.93	10.45	2.9
32		18.57	2.05	12.55	3.1
40		21.59	2.19	15.11	3.3

geocool™
Reliable energy-saving comfort.

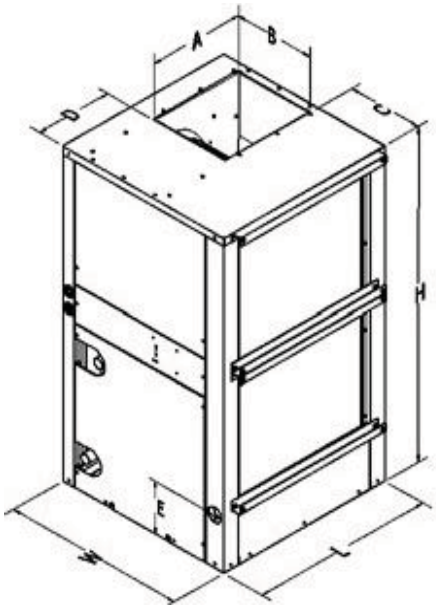

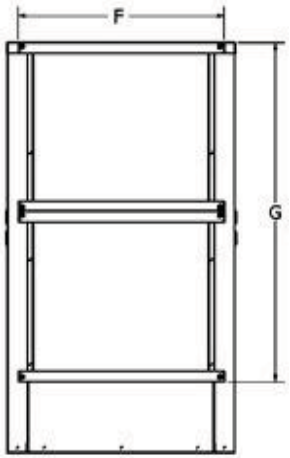

Water Source Heat Pump Units - Vertical

Unit Model #	Dimensions - Inches												Air Filters	
	L	W	H	A	B	C	D	E	F	G	Fluid Conn.	Drain Conn.	Nominal Filter Size	Qty
GCHP01024V	21.5	21.5	39	11.25	9.5	9.00	8.38	6.00	19.50	32.13	3/4	3/4	16x20x1	2
GCHP01031V	21.5	21.5	39	11.25	9.5	9.00	8.38	6.00	19.50	32.13	3/4	3/4	16x20x1	2
GCHP01036V	21.5	21.5	39	11.25	9.5	9.00	8.38	6.00	19.50	32.13	3/4	3/4	16x20x1	2
GCHP01041V	21.5	21.5	39	11.25	9.5	9.00	8.38	6.00	19.50	32.13	3/4	3/4	16x20x1	2
GCHP01048V	26	24	43	13.00	11.38	11.00	6.50	2.25	24.00	40.00	1	3/4	24x20x1	2
GCHP01060V	26	24	43	13.00	11.38	11.00	6.50	2.25	24.00	40.00	1	3/4	24x20x1	2

June 2011

Notes:
1. Units are subject to change without notice.
1. All dimensions +/- 0.25"

geocool HEAT PUMP

Reliable energy-saving comfort.

Saving the environment for future generations

WATER SOURCE & GEOTHERMAL HEAT PUMPS

SPECIFICATION DATA SHEET

GCHP01036

R410A.REFRIGERANT - WATER SOURCE & GEOTHERMAL HEAT PUMPS

WATER LOOP				GROUND WATER			
Cooling		Heating		Cooling		Heating	
Capacity	EER	Capacity	COP	Capacity	EER	Capacity	COP
36,000	16	40,000	4.8	40,000	23.5	32,000	4.2

GROUND LOOP				FLOW RATE	
Cooling		Heating		AIR	WATER
Capacity	EER	Capacity	COP	CFM	GPM
36,500	17.9	26,000	3.6	1,200	9

ELECTRICAL SPECIFICATIONS

Electrical Characteristics	Elect. Symbol	Compressor		Min Circuit Ampacity	Max Fuse Size
		RLA	LRA		
230/1/60	A	16.7	79	27	40
230/3/60	C	10.4	73	19	25
460/3/60	D	5.7	38	10	15
575/3/60	E	3.8	36.5	7	15

FLUID PRESSURE DROP

Fluid Flow	Pressure drop	
(GPM)	(FOH)	(PSIG)
4.5	4.0	1.8
6.0	7.2	3.1
7.9	12.5	5.4
9.0	**16.1**	**7.0**
11.3	25.2	10.9

	UNIT WEIGHT (lbs)		DIMENSION		
	Unit Weight	Shipping Weight	Length	Width	Height
Vertical	220	240	21.50	21.50	39.00
Horizontal	215	235	33.50	21.50	20.75

COOLING

Entering Fluid Temp. (^{0}F)	Entering Air Fluid (^{0}F)	Total Capacity (MBtuH)	Sensible Capacity (MBtuH)	SHF	Power Input (kW)	Heat Rejection (MBtuH)	EER
50	70 db 61 wb	38.47	25.24	0.66	1.79	43.55	25.9
59		37.05	24.57	0.66	1.97	42.74	22.2
70		35.28	23.77	0.67	2.20	41.73	18.6
86		32.62	22.43	0.69	2.57	40.33	14.4
100		30.19	21.29	0.71	2.95	39.22	11.4
50	75 db 63 wb	39.80	28.37	0.71	1.80	44.89	26.7
59		38.34	27.72	0.72	1.98	44.05	22.9
70		36.54	26.80	0.73	2.21	43.03	19.2
86		33.79	25.53	0.76	2.57	41.52	14.9
100		31.25	24.49	0.78	2.95	40.28	11.8
50	80.6 db 66.2 wb	41.97	30.84	0.73	1.81	47.10	27.9
59		**40.00**	**29.74**	**0.74**	**2.01**	**45.81**	**23.5**
70		38.57	29.23	0.76	2.22	45.09	20.2
86		**36.00**	**28.39**	**0.79**	**2.56**	**43.68**	**16.0**
100		33.02	27.01	0.82	2.95	42.06	12.5
50	85 db 71 wb	45.35	30.16	0.66	1.82	50.53	29.9
59		43.75	29.39	0.67	2.00	49.54	25.8
70		41.66	28.55	0.69	2.24	48.26	21.6
86		38.51	27.46	0.71	2.61	46.38	16.7
100		35.88	26.44	0.74	2.97	44.98	13.5

As a result of continuing research and development, specifications are subject to change without notice.

Please contact factory for up-to-date values. *Website: www.geo.cool*

HEATING

Entering Fluid Temp. (^{0}F)	Entering Air Fluid (^{0}F)	Total Capacity (MBtuH)	Power Input (kW)	Heat of Absorb. (MBtuH)	COP
50	60	32.69	2.42	25.49	4.5
60		36.92	2.47	29.53	5.0
68		40.40	2.51	32.87	5.4
80		45.63	2.58	37.86	5.9
50	**68**	**32.00**	**2.54**	**24.38**	**4.2**
60		36.31	2.64	28.35	4.6
68		**40.00**	**2.75**	**31.67**	**4.8**
80		44.85	2.76	36.48	5.4
50	80	31.78	2.93	22.84	3.6
60		35.65	2.96	26.61	3.9
68		38.71	2.99	29.54	4.2
80		43.82	3.08	34.36	4.6

LOW TEMP HEATING

with Antifreeze by ARI-ISO 13256-1

Entering Fluid Temp. (^{0}F)	Entering Air Fluid (^{0}F)	Total Capacity (MBtuH)	Power Input (kW)	Heat of Absorb. (MBtuH)	COP
25	60	23.87	2.21	17.38	3.7
32		26.34	2.25	19.71	4.0
40		29.25	2.3	22.45	4.3
25	68	23.62	2.37	16.56	3.3
32		**26.00**	**2.42**	**18.78**	**3.6**
40		28.89	2.48	21.46	3.9
25	80	20.84	2.65	12.83	2.6
32		24.42	2.73	16.13	2.9
40		28.67	2.85	19.98	3.3

geocool™
Reliable energy-saving comfort.

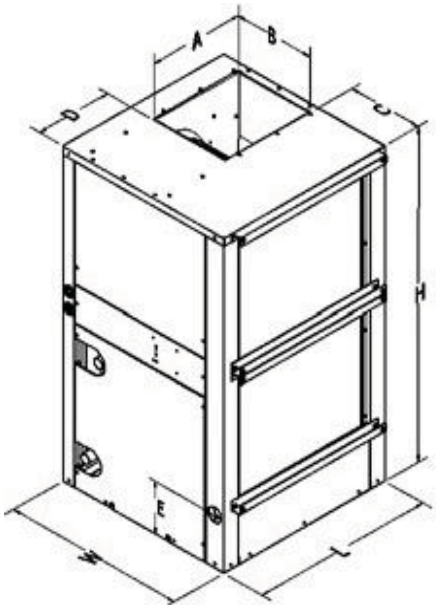

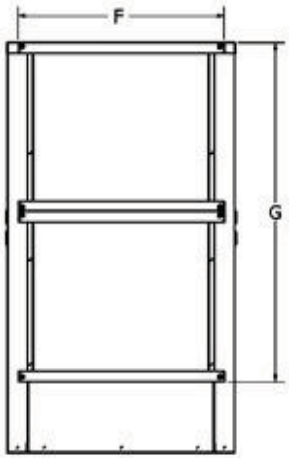

Water Source Heat Pump Units - Vertical

Unit Model #	Dimensions - Inches												Air Filters	
	L	W	H	A	B	C	D	E	F	G	Fluid Conn.	Drain Conn.	Nominal Filter Size	Qty
GCHP01024V	21.5	21.5	39	11.25	9.5	9.00	8.38	6.00	19.50	32.13	3/4	3/4	16x20x1	2
GCHP01031V	21.5	21.5	39	11.25	9.5	9.00	8.38	6.00	19.50	32.13	3/4	3/4	16x20x1	2
GCHP01036V	21.5	21.5	39	11.25	9.5	9.00	8.38	6.00	19.50	32.13	3/4	3/4	16x20x1	2
GCHP01041V	21.5	21.5	39	11.25	9.5	9.00	8.38	6.00	19.50	32.13	3/4	3/4	16x20x1	2
GCHP01048V	26	24	43	13.00	11.38	11.00	6.50	2.25	24.00	40.00	1	3/4	24x20x1	2
GCHP01060V	26	24	43	13.00	11.38	11.00	6.50	2.25	24.00	40.00	1	3/4	24x20x1	2

June 2011

Notes:
1. Units are subject to change without notice.
1. All dimensions +/. 0.25"

geocool HEAT PUMP

Reliable energy-saving comfort.

Saving the environment for future generations

WATER SOURCE & GEOTHERMAL HEAT PUMPS

SPECIFICATION DATA SHEET

R410A.REFRIGERANT - WATER SOURCE & GEOTHERMAL HEAT PUMPS

GCHP01041

WATER LOOP				GROUND WATER			
Cooling		Heating		Cooling		Heating	
Capacity	EER	Capacity	COP	Capacity	EER	Capacity	COP
41,000	16.0	47,000	4.8	47,000	21.4	37,500	4.1

GROUND LOOP				FLOW RATE	
Cooling		Heating		AIR	WATER
Capacity	EER	Capacity	COP	CFM	GPM
44,000	17.0	26,500	3.5	1,400	10.5

ELECTRICAL SPECIFICATIONS

Electrical Characteristics	Elect. Symbol	Compressor		Min Circuit Ampacity	Max Fuse Size
		RLA	LRA		
230/1/60	A	17.9	112	28	45
230/3/60	C	13.2	88	23	35
460/3/60	D	5.9	44	10	15

FLUID PRESSURE DROP

Fluid Flow	Pressure drop	
(GPM)	(FOH)	(PSIG)
5.3	5.1	2.2
7.0	9.1	4.0
9.2	15.7	6.8
10.5	**20.2**	**8.8**
13.1	31.6	13.8

	UNIT WEIGHT (lbs)		DIMENSION		
	Unit Weight	Shipping Weight	Length	Width	Height
Vertical	220	240	21.50	21.50	39.00
Horizontal	215	235	33.50	21.50	20.75

COOLING

Entering Fluid Temp. (^{0}F)	Entering Air Fluid (^{0}F)	Total Capacity (MBtuH)	Sensible Capacity (MBtuH)	SHF	Power Input (kW)	Heat Rejection (MBtuH)	EER
50	70 db 61 wb	45.71	30.67	0.67	2.37	52.42	23.2
59		43.59	29.72	0.68	2.52	50.83	20.5
70		40.91	28.48	0.70	2.72	48.82	17.6
86		36.85	26.55	0.72	3.03	45.82	14.0
100		33.01	24.79	0.75	3.29	42.89	11.4
50	75 db 63 wb	47.38	34.81	0.73	2.36	54.07	24.1
59		45.18	33.81	0.75	2.52	52.41	21.3
70		42.40	32.58	0.77	2.72	50.32	18.2
86		38.18	30.60	0.80	3.04	47.18	14.5
100		34.22	28.93	0.85	3.31	44.16	11.7
50	80.6 db 66.2 wb	36.22	32.22	0.89	3.36	46.31	12.3
59		**47.00**	**36.48**	**0.78**	**2.60**	**54.49**	**21.4**
70		44.84	35.85	0.80	2.73	52.77	19.3
86		**41.00**	**0.00**	**0.00**	**2.96**	**49.74**	**16.0**
100		50.12	38.06	0.76	2.35	56.77	25.7
50	85 db 71 wb	54.17	37.28	0.69	2.32	60.72	28.2
59		51.73	36.30	0.70	2.49	58.86	24.8
70		48.52	35.12	0.72	2.71	56.41	21.0
86		43.57	33.18	0.76	3.06	52.65	16.4
100		39.01	31.32	0.80	3.38	49.17	13.1

As a result of continuing research and development, specifications are subject to change without notice.

Please contact factory for up-to-date values. *Website: www.geo.cool*

HEATING

Entering Fluid Temp. (^{0}F)	Entering Air Fluid (^{0}F)	Total Capacity (MBtuH)	Power Input (kW)	Heat of Absorb. (MBtuH)	COP
50	60	38.86	2.96	30.14	4.5
60		44.52	3.08	35.38	4.9
68		48.98	3.14	39.64	5.2
80		55.39	3.17	45.94	5.9
50	**68**	**37.50**	**3.08**	**28.35**	**4.1**
60		42.90	3.21	33.30	4.5
68		**47.00**	**3.27**	**37.21**	**4.8**
80		53.52	3.35	43.45	5.3
50	80	0.00	0.40	0.00	3.6
60		40.61	3.41	30.33	4.0
68		44.83	3.52	34.19	4.2
80		0.00	0.40	0.00	4.6

LOW TEMP HEATING

with Antifreeze by ARI-ISO 13256-1

Entering Fluid Temp. (^{0}F)	Entering Air Fluid (^{0}F)	Total Capacity (MBtuH)	Power Input (kW)	Heat of Absorb. (MBtuH)	COP
25	60	24.30	2.43	17.40	3.5
32		27.75	2.54	20.47	3.8
40		31.58	2.66	23.88	4.1
25	68	22.97	2.49	15.85	3.2
32		**26.50**	**2.62**	**18.93**	**3.5**
40		30.32	2.75	22.28	3.8
25	80	21.49	2.58	14.06	2.9
32		24.13	2.71	16.27	3.1
40		28.34	2.89	19.86	3.3

geocool™
Reliable energy-saving comfort.

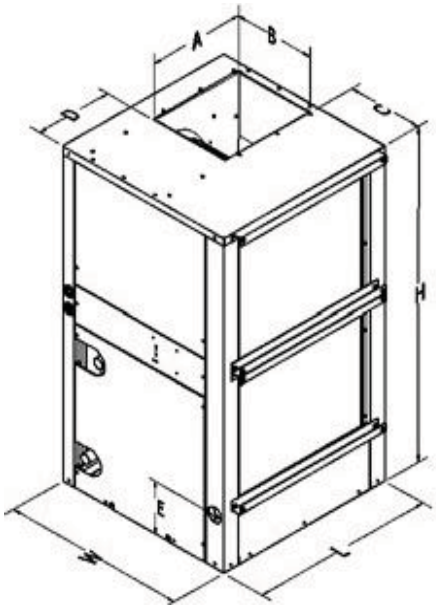

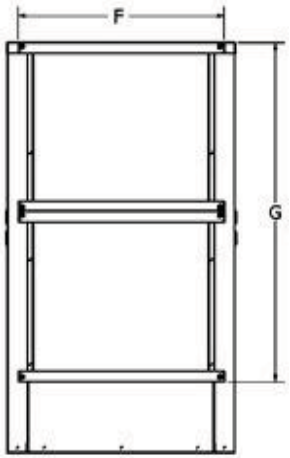

Water Source Heat Pump Units - Vertical

Unit Model #	Dimensions - Inches												Air Filters	
	L	W	H	A	B	C	D	E	F	G	Fluid Conn.	Drain Conn.	Nominal Filter Size	Qty
GCHP01024V	21.5	21.5	39	11.25	9.5	9.00	8.38	6.00	19.50	32.13	3/4	3/4	16x20x1	2
GCHP01031V	21.5	21.5	39	11.25	9.5	9.00	8.38	6.00	19.50	32.13	3/4	3/4	16x20x1	2
GCHP01036V	21.5	21.5	39	11.25	9.5	9.00	8.38	6.00	19.50	32.13	3/4	3/4	16x20x1	2
GCHP01041V	21.5	21.5	39	11.25	9.5	9.00	8.38	6.00	19.50	32.13	3/4	3/4	16x20x1	2
GCHP01048V	26	24	43	13.00	11.38	11.00	6.50	2.25	24.00	40.00	1	3/4	24x20x1	2
GCHP01060V	26	24	43	13.00	11.38	11.00	6.50	2.25	24.00	40.00	1	3/4	24x20x1	2

June 2011

Notes:
1. Units are subject to change without notice.
1. All dimensions +/. 0.25"

geocool™ Reliable energy-saving comfort.

HEAT PUMP

Saving the environment for future generations

WATER SOURCE & GEOTHERMAL HEAT PUMPS

SPECIFICATION DATA SHEET

R410A.REFRIGERANT - WATER SOURCE & GEOTHERMAL HEAT PUMPS

GCHP01048

WATER LOOP				GROUND WATER			
Cooling		Heating		Cooling		Heating	
Capacity	EER	Capacity	COP	Capacity	EER	Capacity	COP
51,000	18.0	58,000	5.0	57,000	27.0	50,000	4.3

GROUND LOOP				FLOW RATE	
Cooling		Heating		AIR	WATER
Capacity	EER	Capacity	COP	CFM	GPM
53,000	20.0	39,000	3.6	1,600	12.0

ELECTRICAL SPECIFICATIONS

Electrical Characteristics	Elect. Symbol	Compressor		Min Circuit Ampacity	Max Fuse Size
		RLA	LRA		
230/1/60	A	24.3	117	36	70
230/3/60	C	13.7	83.1	23	35
460/3/60	D	6.1	41	11	15
265/1/60	B	16.2	98	25	40

FLUID PRESSURE DROP

Fluid Flow	Pressure drop	
(GPM)	(FOH)	(PSIG)
6.0	3.3	1.4
8.0	5.9	2.6
10.6	10.2	4.4
12.0	**13.1**	**5.7**
15.0	20.5	8.9

	UNIT WEIGHT (lbs)		DIMENSION		
	Unit Weight	Shipping Weight	Length	Width	Height
Vertical	320	340	26.00	24.00	43.00
Horizontal	330	350	45.50	26.00	21.00

COOLING

Entering Fluid Temp. (^{0}F)	Entering Air Fluid (^{0}F)	Total Capacity (MBtuH)	Sensible Capacity (MBtuH)	SHF	Power Input (kW)	Heat Rejection (MBtuH)	EER
50	70 db 61 wb	53.61	35.38	0.66	2.25	59.69	30.1
59		51.60	34.40	0.67	2.53	58.61	25.1
70		49.05	33.17	0.68	2.83	57.09	20.8
86		45.65	32.01	0.70	3.34	55.44	15.9
100		41.80	29.62	0.71	3.82	53.22	12.5
50	75 db 63 wb	55.50	39.89	0.72	2.24	61.55	31.3
59		53.43	38.87	0.73	2.52	60.42	26.1
70		51.23	38.28	0.75	2.85	59.34	21.5
86		46.91	35.76	0.76	3.34	56.72	16.3
100		44.88	35.16	0.78	3.90	56.58	13.1
50	80.6 db 66.2 wb	59.08	43.83	0.74	2.22	65.05	33.7
59		**57.00**	**43.06**	**0.76**	**2.58**	**64.20**	**27.0**
70		54.16	42.05	0.78	2.84	62.25	22.8
86		**51.00**	**40.09**	**0.79**	**3.30**	**60.67**	**18.0**
100		46.30	38.74	0.84	3.82	57.74	13.8
50	85 db 71 wb	63.80	42.84	0.67	2.18	69.64	37.3
59		61.39	42.12	0.69	2.48	68.23	30.6
70		58.37	40.96	0.70	2.83	66.42	24.7
86		54.01	39.46	0.73	3.34	63.81	18.8
100		50.07	37.88	0.76	3.82	61.51	14.9

As a result of continuing research and development, specifications are subject to change without notice.

Please contact factory for up-to-date values. *Website: www.geo.cool*

HEATING

Entering Fluid Temp. (^{0}F)	Entering Air Fluid (^{0}F)	Total Capacity (MBtuH)	Power Input (kW)	Heat of Absorb. (MBtuH)	COP
50	60	49.68	3.57	39.12	4.7
60		55.83	3.64	45.02	5.2
68		60.84	3.70	49.82	5.5
80		68.28	3.77	57.03	6.1
50	**68**	**50.00**	**3.88**	**38.37**	**4.3**
60		54.70	3.89	43.05	4.7
68		**58.00**	**3.87**	**46.40**	**5.0**
80		66.85	4.04	54.66	5.5
50	80	47.72	4.21	34.96	3.7
60		53.13	4.29	40.08	4.1
68		57.74	4.37	44.42	4.3
80		64.87	4.50	51.13	4.7

LOW TEMP HEATING

with Antifreeze by ARI-ISO 13256-1

Entering Fluid Temp. (^{0}F)	Entering Air Fluid (^{0}F)	Total Capacity (MBtuH)	Power Input (kW)	Heat of Absorb. (MBtuH)	COP
25	60	36.08	3.32	26.35	3.7
32		39.61	3.39	29.65	4.0
40		43.73	3.45	33.54	4.3
25	68	35.58	3.57	25.02	3.4
32		**39.00**	**3.65**	**28.17**	**3.6**
40		42.95	3.67	32.02	3.9
25	80	34.86	3.93	23.05	3.0
32		38.16	3.98	26.18	3.2
40		42.25	4.06	29.99	3.4

geocool™
Reliable energy-saving comfort.

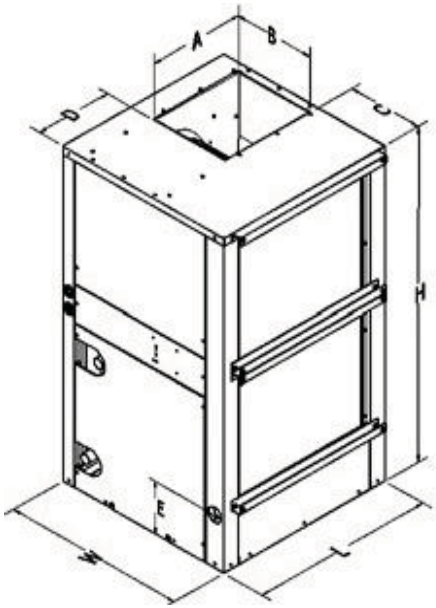

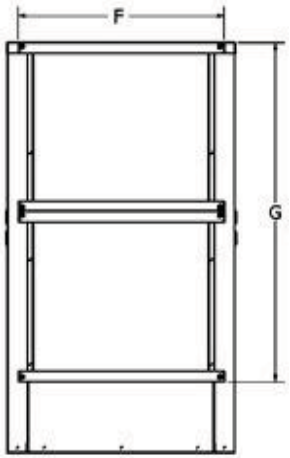

Water Source Heat Pump Units - Vertical

Unit Model #	Dimensions - Inches												Air Filters	
	L	W	H	A	B	C	D	E	F	G	Fluid Conn.	Drain Conn.	Nominal Filter Size	Qty
GCHP01024V	21.5	21.5	39	11.25	9.5	9.00	8.38	6.00	19.50	32.13	3/4	3/4	16x20x1	2
GCHP01031V	21.5	21.5	39	11.25	9.5	9.00	8.38	6.00	19.50	32.13	3/4	3/4	16x20x1	2
GCHP01036V	21.5	21.5	39	11.25	9.5	9.00	8.38	6.00	19.50	32.13	3/4	3/4	16x20x1	2
GCHP01041V	21.5	21.5	39	11.25	9.5	9.00	8.38	6.00	19.50	32.13	3/4	3/4	16x20x1	2
GCHP01048V	26	24	43	13.00	11.38	11.00	6.50	2.25	24.00	40.00	1	3/4	24x20x1	2
GCHP01060V	26	24	43	13.00	11.38	11.00	6.50	2.25	24.00	40.00	1	3/4	24x20x1	2

June 2011

Notes:
1. Units are subject to change without notice.
1. All dimensions +/. 0.25"

geocool™ Reliable energy-saving comfort.

HEAT PUMP

Saving the environment for future generations

WATER SOURCE & GEOTHERMAL HEAT PUMPS

SPECIFICATION DATA SHEET

R410A.REFRIGERANT - WATER SOURCE& GEOTHERMAL HEAT PUMPS

GCHP01060

WATER LOOP				GROUND WATER			
Cooling		Heating		Cooling		Heating	
Capacity	EER	Capacity	COP	Capacity	EER	Capacity	COP
60,000	16.0	70,000	4.5	68,000	22.0	58,000	4.1

GROUND LOOP				FLOW RATE	
Cooling		Heating		AIR	WATER
Capacity	EER	Capacity	COP	CFM	GPM
63,000	17.2	45,000	3.5	1,900	15.0

ELECTRICAL SPECIFICATIONS

Electrical Characteristics	Elect. Symbol	Compressor		Min Circuit Ampacity	Max Fuse Size
		RLA	LRA		
230/1/60	A	26.4	134	39	60
230/3/60	C	16	110	26	40
460/3/60	D	7.8	52	13	20
575/3/60	E	5.7	38.9	10	15

FLUID PRESSURE DROP

Fluid Flow	Pressure drop	
(GPM)	(FOH)	(PSIG)
7.5	4.6	2.0
10.1	8.3	3.6
13.2	14.2	6.2
15.0	**18.4**	**8.0**
18.8	28.8	12.5

	UNIT WEIGHT (lbs)		DIMENSION		
	Unit Weight	Shipping Weight	Length	Width	Height
Vertical	320	340	26.00	24.00	43.00
Horizontal	340	360	45.50	26.00	21.00

COOLING

Entering Fluid Temp. (^{0}F)	Entering Air Fluid (^{0}F)	Total Capacity (MBtuH)	Sensible Capacity (MBtuH)	SHF	Power Input (kW)	Heat Rejection (MBtuH)	EER
50	70 db 61 wb	64.55	42.23	0.65	3.17	73.68	24.1
59		62.22	41.18	0.66	3.43	72.25	21.2
70		59.28	39.78	0.67	3.79	70.54	18.0
86		54.84	37.70	0.69	4.40	68.18	14.0
100		50.87	35.95	0.71	4.97	66.14	11.14
50	75 db 63 wb	66.82	47.60	0.71	3.17	75.96	25.0
59		64.42	46.48	0.72	3.44	74.48	21.8
70		61.41	45.02	0.73	3.80	72.71	18.5
86		56.74	43.42	0.77	4.38	70.00	14.6
100		52.66	41.43	0.79	4.97	67.95	11.7
50	**80.6 db 66.2 wb**	70.59	52.08	0.74	3.19	79.79	26.2
59		**68.00**	**50.92**	**0.75**	**3.58**	**78.55**	**22.0**
70		64.77	49.65	0.77	3.81	76.09	19.5
86		**60.00**	**47.41**	**0.79**	**4.24**	**72.80**	**16.0**
100		55.49	45.97	0.83	4.98	70.83	12.3
50	85 db 71 wb	76.35	50.74	0.66	3.22	85.66	28.0
59		73.61	49.56	0.67	3.49	83.83	24.6
70		70.11	48.63	0.69	3.84	81.54	20.9
86		64.94	46.19	0.71	4.42	78.36	16.5
100		60.10	44.68	0.74	5.04	75.63	13.2

As a result of continuing research and development, specifications are subject to change without notice.

Please contact factory for up-to-date values. *Website: www.geo.cool*

HEATING

Entering Fluid Temp. (^{0}F)	Entering Air Fluid (^{0}F)	Total Capacity (MBtuH)	Power Input (kW)	Heat of Absorb. (MBtuH)	COP
50	60	58.05	4.39	44.74	4.4
60		65.48	4.53	51.70	4.8
68		71.67	4.66	57.46	5.0
80		81.88	4.89	66.87	5.5
50	**68**	**58.00**	**4.64**	**43.85**	**4.1**
60		64.01	4.82	49.24	4.3
68		**70.00**	**5.05**	**54.44**	**4.5**
80		80.57	5.23	64.39	5.0
50	80	55.68	5.19	39.62	3.5
60		62.84	5.37	46.20	3.8
68		69.02	5.53	51.82	4.0
80		78.65	5.80	60.53	4.3

LOW TEMP HEATING

with Antifreeze by ARI-ISO 13256-1

Entering Fluid Temp. (^{0}F)	Entering Air Fluid (^{0}F)	Total Capacity (MBtuH)	Power Input (kW)	Heat of Absorb. (MBtuH)	COP
25	60	41.94	3.92	30.24	3.6
32		45.83	3.98	33.91	3.8
40		50.74	4.07	38.51	4.2
25	**68**	41.34	4.18	28.73	3.3
32		**45.00**	**4.26**	**32.14**	**3.5**
40		49.69	4.36	36.5	3.8
25	80	40.41	4.65	26.23	2.8
32		44.14	4.74	29.63	3.0
40		48.47	4.83	33.65	3.3

geocool™
Reliable energy-saving comfort.

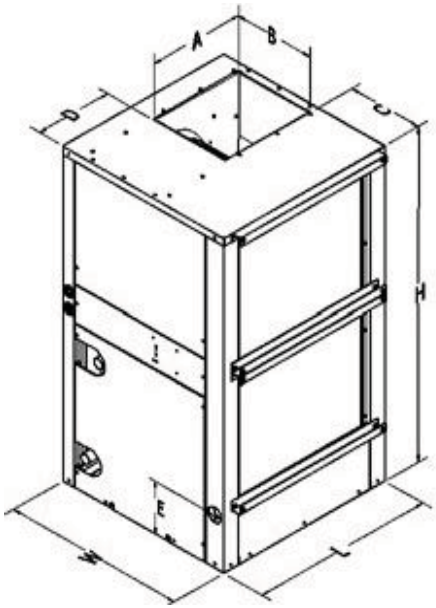

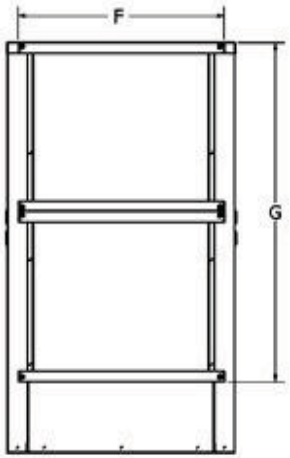

Water Source Heat Pump Units - Vertical

Unit Model #	Dimensions - Inches												Air Filters	
	L	W	H	A	B	C	D	E	F	G	Fluid Conn.	Drain Conn.	Nominal Filter Size	Qty
GCHP01024V	21.5	21.5	39	11.25	9.5	9.00	8.38	6.00	19.50	32.13	3/4	3/4	16x20x1	2
GCHP01031V	21.5	21.5	39	11.25	9.5	9.00	8.38	6.00	19.50	32.13	3/4	3/4	16x20x1	2
GCHP01036V	21.5	21.5	39	11.25	9.5	9.00	8.38	6.00	19.50	32.13	3/4	3/4	16x20x1	2
GCHP01041V	21.5	21.5	39	11.25	9.5	9.00	8.38	6.00	19.50	32.13	3/4	3/4	16x20x1	2
GCHP01048V	26	24	43	13.00	11.38	11.00	6.50	2.25	24.00	40.00	1	3/4	24x20x1	2
GCHP01060V	26	24	43	13.00	11.38	11.00	6.50	2.25	24.00	40.00	1	3/4	24x20x1	2

June 2011

Notes:
1. Units are subject to change without notice.
1. All dimensions +/. 0.25"